ThermOmegaTech®

MAGNUM GURU®

LOCOMOTIVE FREEZE PROTECTION

ISO9001 CERTIFIED

BENEFITS

- Drains twice as fast as the standard GURU® Plug
- Will not trip or dump while locomotive is running
- Straight SAE threads and O-ring seals provide for easy field maintenance and testing
- Easy installation
- Completely mechanical - No electrical or air connections
- Not affected by air flow or air temperature surrounding valve - releases only when cooling water reaches setpoint
- Easy system refill
- Models available to convert existing freeze protection
- Slotted actuator feature prevents nuisance dumps when refilling cooling system with cold water.
- Unit automatically rearms after filling and reheating

DESIGN FEATURES

- Actuator sensing surface is the only wetted part
- Design excludes cooling water chemicals and other debris from moving parts
- Long service life: All moving parts are stainless steel
- Available in modified 1-1/4" NPT tee or flanged tee body styles
- Paint mask minimizes accidental paint-ins
- Knob on cartridge for easy installation and removal even in awkward locations

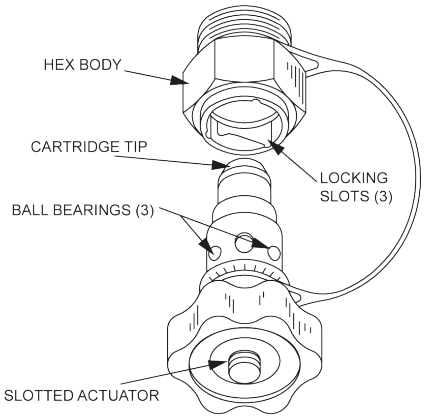

The Magnum GURU® Plug is available in the models shown for new installations or to retrofit existing freeze protection systems by Ogontz, Prime, Salem, Graham-White, and Microphor.

OPERATION

The Magnum GURU® Plug is a higher discharge capacity version of the standard GURU® Plug. The Magnum GURU® Plug is a self-operating thermostatic drain valve that responds to engine coolant temperature and will pop open and drain when coolant reaches the setpoint (35°F or 40°F). This provides almost a full 1.2 inch bore to rapidly drain a locomotive before freeze damage can occur.

Resetting and rearming the Magnum GURU® Plug is easily accomplished by simply reheating the cartridge and utilizing the slotted actuator feature with the GURU® Flag and Clip tool. This feature prevents the GURU® Plug from triggering open again while refilling the cooling system with cold water.

APPLICATIONS

- Locomotive engine cooling systems
- Stand-by diesel heating circulators
- Back up protection in event of shutdown
- On-board tanks and piping

MAGNUMGURU
REV: 06/1/16

MAGNUM GURU®

LOCOMOTIVE FREEZE PROTECTION

MAGNUM TYPE S

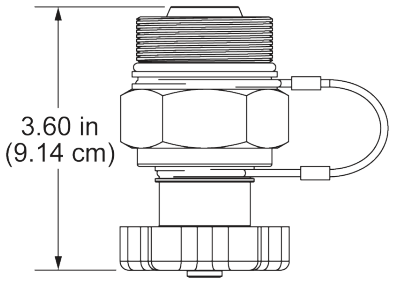

MAGNUM TYPE T

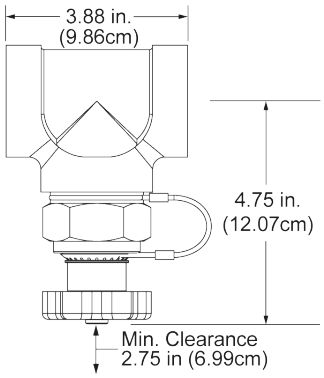

ANTI-TAMPER

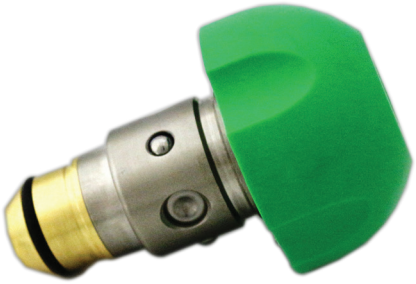

MAGNUM TYPE FL, FL-GX & FL-FL-GX

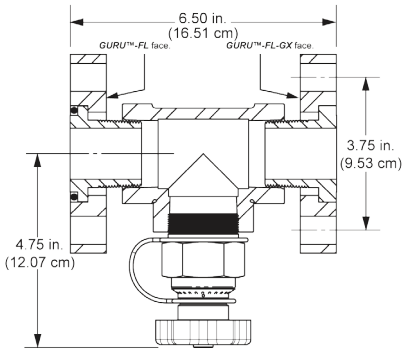

FLAG AND CLIP (SINGLE LANYARD)

ANTI-TAMPERING (3 LANYARDS)

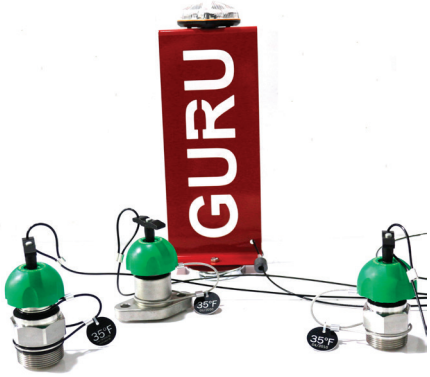

ORDERING INFORMATION

PART NUMBER		DESCRIPTION	NOTES
35°	40°		
470-001110-035	470-001000-000	MAGNUM TYPE-S	
470-002110-035	470-002000-000	MAGNUM TYPE-T	
470-003110-035	470-003000-000	MAGNUM TYPE-FL (WITH/GROOVES)	GROOVED FLANGE QUAD SEAL
470-004110-035	470-004000-000	MAGNUM TYPE-FL-GX (WITHOUT/GROOVES)	FLAT FACED FLANGES
470-005110-035	470-005000-000	MAGNUM TYPE-FL-FL-GX (WITH & WITHOUT GROOVE)	1 FLAT AND 1 GROOVED FLANGE
470-010110-035	470-010000-040	MAGNUM CARTRIDGE	REPLACEMENT MAGNUM GURU® CARTRIDGE
04-052		FLAG AND CLIP WITH STROBE LIGHT	PREVENTS NUISANCE DUMPS WHEN REFILLING
04-066		ANTI-TAMPERING ASSEMBLY, WITH STROBE LIGHT	PREVENTS NUISANCE DUMPS WHEN REFILLING
FOR WATER COOLED AIR COMPRESSOR FREEZE PROTECTION, SEE GURU® CH & CHS PRODUCT SHEET.			

The suitability of the valve for the intended application is the responsibility of the end user. Magnum GURU® valves are covered by a 1-year warranty.

ThermOmegaTech, Inc.
353 Ivyland Road
Warminster, PA 18974

1-877-379-8258
www.ThermOmegaTech.com

MADE IN THE USA

Because of continuous improvements, ThermOmegaTech, Inc. reserves the right to change the design and specifications without notice