ThermOmegaTech

TV/US-X & TV/US-XR

TEMPERATURE CONTROL VALVE

ISO9001 CERTIFIED

BENEFITS

- Prevents process overheating
- Discharges minimum amount of media for temperature control
- Maintains optimal process temperature
- Quick and easy installation
- Long service life

DESIGN FEATURES

- All stainless steel construction
- Exclusive ***Thermoloid***® sensor/controller
- Narrow temperature band
- Compact low mass - fast response
- Ram-type plug for reliable shut off
- Unaffected by pressure variations

APPLICATIONS

These compact self contained control valves can maintain very tight temperature control of any number of control loops using steam, liquid phase heat transfer media such as Dowtherm®, hot water, hot oil, glycol, compressed air, etc. In general they can be used whenever accurate but low cost control is required. The reverse acting model, ***TV/US-XR*** can be used to control cooling media to economically remove heat from equipment or a process. Controlling air flow to a vortex cooling device is a common application. Another common application is use of the ***TV/US-XR*** to control cooling media flow to a sample cooler in response to sample temperature. Sample heating applications are commonly controlled by the ***TV/US-X***.

SAMPLE APPLICATION

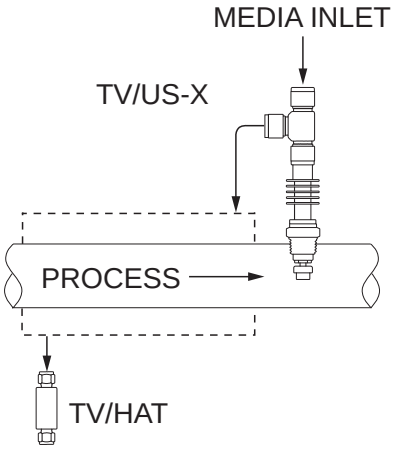

OPERATION

The ***TV/US-X*** and ***TV/US-XR*** valves' **Thermoloid**® sensor/controller element may be placed in contact with the process line or pipe with the optional band-o-let fitting, or in the line with the integral 3/4 NPT bushing. This allows the temperature element to be in contact with the process to control the valve and regulate the inflow of heating media (or cooling media with the ***TV/US-XR***). Input temperatures or steam supply can vary widely, but the control temperature is maintained within desired limits.

1-877-379-8258 | www.ThermOmegaTech.com | valves@thermomegatech.com

TV/US-X & TV/US-XR

TEMPERATURE CONTROL VALVE

PARTS & MATERIALS

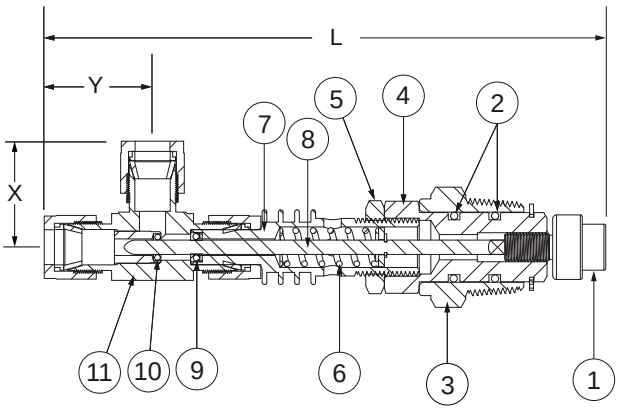

ITEM	DESCRIPTION	MATERIAL
1	THERMAL ACTUATOR	300 Series S/S
2	BUSHING SEALS	See Note 3
3	BUSHING - 3/4" NPT	300 Series S/S
4	ADAPTER	300 Series S/S
5	LOCKNUT	See note #2
6	OPERATING SPRING	300 Series S/S
7	YOKE	300 Series S/S
8	PLUG/STEM ASSEMBLY	300 Series S/S
9	STEM SEAL	PTFE
10	SEAT SEAL	PTFE
11	VALVE BODY	300 Series S/S

DIMENSIONS & CAPACITIES

TUB O.D. Size	L		X & Y		Weight		C_V	Maximum Operating Pressure	Maximum Temperature	
	in	mm	in	mm	Lb	Kg			Valve End	Sensing End
3/8"	6.2	158	1.20	30	0.6	0.27	0.5	200 PSIG (13.8 BAR)	388°F (198°C)	150°F over setpoint
1/2"			1.42	36			0.9			

ORDERING

Part Number[1]	Description
783 - 000000 - XXX	3/8" TV/US-X
784 - 000000 - XXX	1/2" TV/US-X
793 - 000000 - XXX	3/8" TV/US-XR
794 - 000000 - XXX	1/2" TV/US-XR

NOTES

1. Standard open set point temperatures "XXX" available:
   a. **X Series:** 035°F, 040°F, 050°F, 055°F, 060°F, 065°F, 075°F, 085°F, 090°F, 095°F, 100°F, 105°F, 110°F, 120°F, 125°F, 130°F, 140°F, 150°F, 155°F, 160°F, 170°F, 180°F, 190°F, and 200°F.
   b. **For XR Series:** 040°F, 045°F, 050°F, 060°F, 070°F, 075°F, 085°F, 095°F, 100°F, 105°F, 110°F, 115°F, 120°F, 125°F, 130°F, 140°F, 150°F, 160°F, 170°F, 175°F, 180°F, 190°F, 200°F, and 210°F.
   c. **Note: Closing temperature is typically 10°F above opening temperature for Direct Acting valves and 10°F below opening temperature for Reverse Acting valves. Consult factory for special higher or lower settings**
2. Optional Band-O-Let type attachment fitting must be specified when ordering.
3. Viton is standard , others are available.
4. Parker fittings are standard. Swagelok fittings are available.
5. A #20 mesh strainer is recommended for use with all port sizes.
6. All TV/US-X and TV/US-XR valves are factory tested and covered by a 36 month prorated warranty.

Therm-Omega-Tech, Inc.
353 Ivyland Road
Warminster, PA 18974

1-877-379-8258
www.ThermOmegaTech.com
valves@thermomegatech.com

Because of continuous improvements, Therm-Omega-Tech, Inc. reserves the right to change the design and specifications without notice