ThermOmegaTech®

ISO9001 Certified

# INSTALLATION, OPERATION, & MAINTENANCE INSTRUCTIONS FOR WATER WASHDOWN STATIONS

(not for steam – water mixing stations)

## SAFETY NOTES:

NEVER POINT WASHDOWN GUN/NOZZLE AT A PERSON.
USE CAUTION WHEN WORKING WITH POTENTIALLY SCALDING HOT WATER.
Use proper safety procedures and wear appropriate safety equipment when operating washdown stations.

Make sure pressure of water supply is not higher than rating for washdown station and hose. Refer to product bulletin for specific unit being installed.

1. Factory recommends mounting washdown unit vertically using supplied wall-mount bracket. Unit should be mounted so ample room is available for adjusting valves, mounting rack and hose, and for service.
2. Use pipe thread sealant on all male pipe threads prior to tightening.
3. Mount unit by tightening inlet piping to washdown station.
4. Attach station mounting bracket to wall using two 7/16" lag bolts or screws.
5. Attach hose rack to wall using two 3/8" lag bolts or screws.
6. After installation, turn on water supply and check that all connections are free of leaks.

   FREEZE PROTECTION: If unit is exposed to potentially freezing weather, take normal precautions to prevent unit and supply lines from freezing. Freeze protection bleeder valves can be used to prevent freezing; consult factory for more information on HAT/FP valves. Heat tracing is another method of freeze protection.

7. Adopt a proper body stance and secure grip to counteract sudden high force when nozzle/gun is operated.
8. To operate, turn on water supply to washdown station. For hot and cold water mixing s tations, adjust globe valves to provide desired output water temperature while activating flow with nozzle/gun.
9. After washdown is completed, turn off water supply to washdown station.
10. For additional maintenance questions or spare parts, consult factory.

**For washdown station assemblies with the high temperature safety shutoff option using SmartFlow:**

1. Install hose to outlet of SmartFlow
2. Test safety shutoff at least weekly to confirm safety shutoff temperature
   - 2a. Reduce cold water flow until hot water temp exceeds SmartFlow shutoff and observe proper shutoff operation
   - 2b. If safety shutoff does not operate properly, lock out washdown station and initiate maintenance or replacement.

ThermOmegaTech, Inc.
353 Ivyland Road
Warminster, PA 18974
1-877-379-8258
www.ThermOmegaTech.com

MADE IN THE USA



Because of continuous improvements, ThermOmegaTech, Inc. reserves the right to change the design and specifications without notice.

# INSTALLATION, OPERATION, & MAINTENANCE INSTRUCTIONS

ISO9001 CERTIFIED

## HCX

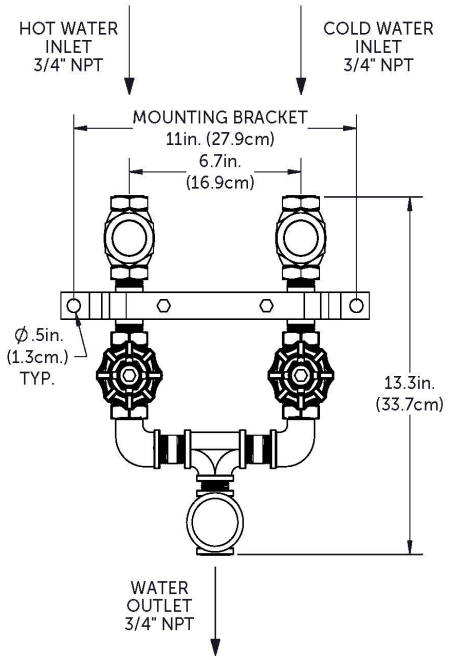


## HCX WITH SMARTFLOW

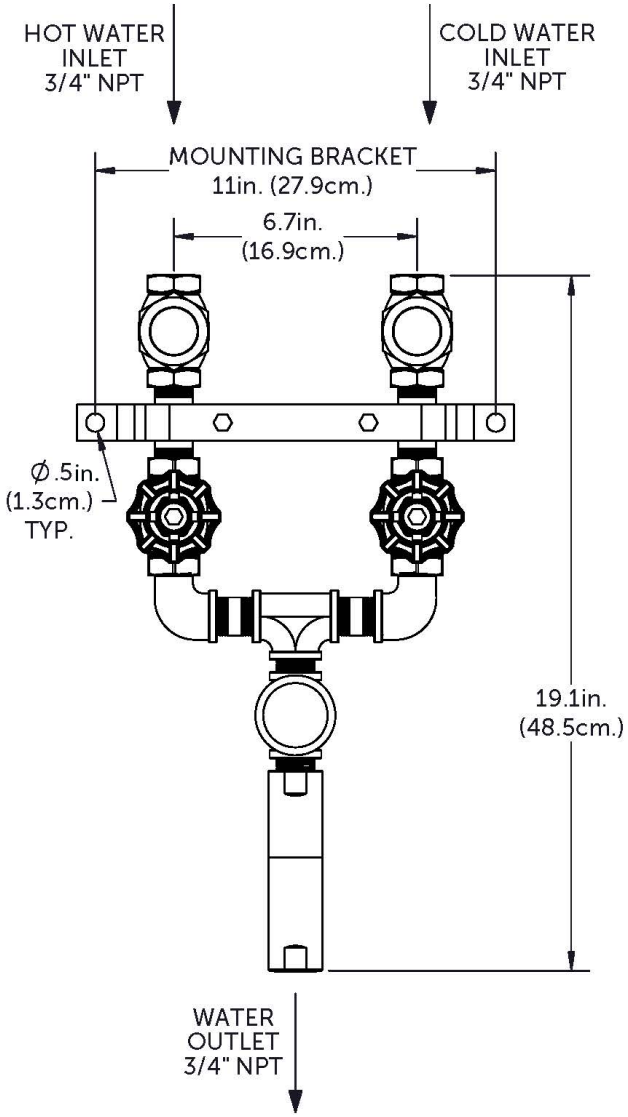


## HCS

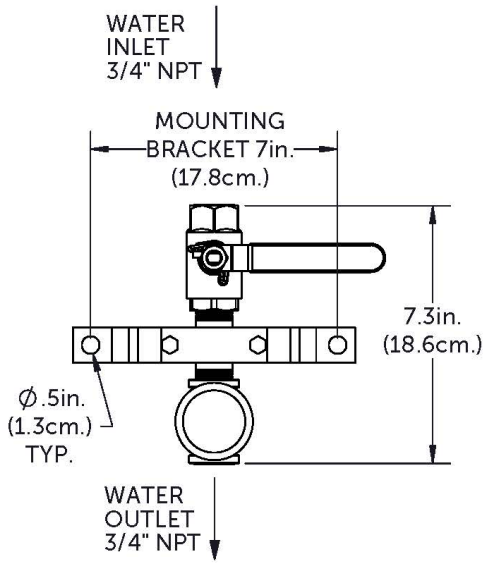


ThermOmegaTech, Inc.
353 Ivyland Road
Warminster, PA 18974
1-877-379-8258
www.ThermOmegaTech.com



*Because of continuous improvements, ThermOmegaTech, Inc. reserves the right to change the design and specifications without notice*